Vitrocell® High Throughput Exposure Module: Deposition and Cytotoxicity of Smoke/Aerosol from Different Tobacco Product Types

Abstract #2460

[1]Leverette R, [1]Keyser B, [2]Seymour A, [2]Hollings M, and [1]Bombick B
[1]Scientific & Regulatory Affairs, RAI Services Company, Winston-Salem, NC 27102
[2]Covance Laboratories Ltd, Otley Road, Harrogate, North Yorkshire HG3 1PY, UK

RAI Services Company

Abstract

The continued development of whole smoke/aerosol exposure systems provides a means to conduct *in vitro* assessment of freshly generated whole smoke and aerosol from either combustible or tobacco heating products (THP) and electronic nicotine delivery systems (ENDS), respectively. A challenge with such exposure systems is ensuring sufficient sample throughput for *in vitro* toxicological studies in a timely manner. Vitrocell® has developed a high throughput whole smoke/aerosol exposure module designed to concurrently deliver up to seven doses of whole smoke/aerosol as well as a clean air control to 48 mammalian cell cultures grown on 24mm Transwell® inserts. Initial characterization of this exposure system was conducted using a series of experiments designed to assess the delivery of whole smoke/aerosol from either the Kentucky Reference 3R4F combustible cigarette or a commercially available THP. A Vitrocell® VC10® smoking robot was used to deliver smoke/aerosol generated under the Health Canada Intense (HCI) smoking regimen (55 mL puff, 2 sec puff duration, 30 sec puff interval) to the exposure module. Smoke/aerosol doses were controlled using dilution airflows of 0.5 – 10 L/min for 3R4F and 0 (undiluted) - 4 L/min for the THP. Smoke/aerosol deposition was quantified using fluorescence measurements of captured particulate matter and chemical analysis (e.g., glycerol, nicotine) of either DMSO (3R4F) or PBS (THP) traps within the module. Following dosimetry characterization, the cytotoxicity of 3R4F whole smoke was determined utilizing the Neutral Red Uptake assay (NRU). IC_{50} values were determined under either HCI or ISO (35 mL puff, 2 sec puff duration, 60 sec puff interval) smoking regimens and compared to historical data from standard Vitrocell® exposure modules (i.e. 6/4 base module). Results demonstrate consistent and dose-dependent deposition of smoke/aerosol constituents. 3R4F whole smoke gave a dose-dependent decrease in cell viability in the NRU assay, resulting in IC_{50} values that were comparable to those generated from the standard Vitrocell® exposure modules. Overall, the Vitrocell® 48-well exposure module will be a useful tool to increase sample throughput for the *in vitro* toxicological assessment of freshly generated whole smoke and aerosols from different tobacco product types.

Material and Methods

Smoke/Aerosol Delivery and Distribution:

- THP and 3R4F cigarettes were conditioned at least 48 hrs @ 22 ± 1°C, 60 ± 3% relative humidity (ISO 3402)[1]
- Each exposure module well contained a stainless steel insert with 3 mL of PBS (THP) or DMSO (3R4F)
- THP dilution air flow rates (L/min): 0 (undiluted) / 0.25 / 0.5 / 1.0 / 2.0 / 3.0 / 4.0
- 3R4F dilution air flow rates (L/min): 0.5 / 1.0 / 2.0 / 4.0 / 6.0 / 8.0 / 10.0
- HCI regimen: 55 mL puff volume, 2 sec puff, 30 sec puff interval; 100% vent blocking for 3R4F only
- Vacuum flow rate to exposure wells was 5 mL/min
- 8 sec puff exhaust to deliver smoke/aerosol to exposure module

3R4F Dosimetry: Pad-collected TPM extracted in DMSO @ 24 mg/mL and serially diluted to generate a standard curve (Ex 355 / Em 485)[2] (Figure 2A) used to extrapolate TPM delivery (smoke-exposed DMSO).

THP Dosimetry: THP delivered dose was derived by quantifying glycerol captured in aerosol-exposed PBS using Free Glycerol Reagent (Sigma # FG0100).

3R4F Whole Smoke Cytotoxicity; Neutral Red Uptake Assay (NRU):

- CHO-WBL cells (ECACC), seeded @ ~3 x 10^5 cells per 24 mm Transwell® in McCoy's 5A complete media (with serum) were incubated @ 37 ± 1°C for 18 - 24 hrs [5% (v/v) CO_2] to achieve ~50% confluency for exposures.
- Whole smoke from 3 (HCI) or 8 (ISO) 3R4F cigarettes were diluted (L/min) as above (HCI, High Throughput), or 1.0 / 4.0 / 8.0 / 10.0 (HCI, Standard modules), or 2.0 / 4.0 / 5.0 / 6.0 / 7.0 / 8.0 / 10.0 (ISO, High Throughput).
- After exposure, cells were incubated at 37 ± 1°C [5% (v/v) CO_2] ~24 hrs. Neutral Red solution (50 µg/mL) was added, incubated for 3 hrs, washed and extracted. OD_{540} from exposed cells was expressed as % ALI (Air Liquid Interface) Control (Figure 4). IC_{50} values (µg TPM ± SE) were calculated using GraphPad Prism 8.0.1.

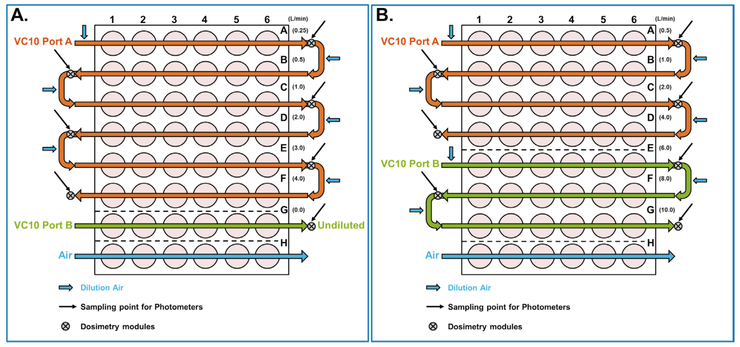

Figure 1: Vitrocell® high throughput exposure module set-up for either THP (A) or 3R4F combustible cigarette (B). Diagrams indicate placement of photometers (⟶), dosimetry modules (⊗) and addition of air for smoke/aerosol dilution (➡).

58th Society of Toxicology Annual Meeting; Baltimore, MD March 10-14, 2019

Results

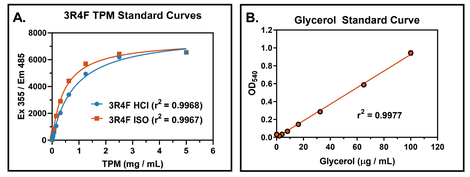

Figure 2: 3R4F Total Particulate Matter (TPM) (A) and Glycerol (B) standard curves.
(A) Pad-collected 3R4F TPM (in DMSO) was serially diluted and fluorescence (Ex 355 / Em 485) was measured over a range of TPM concentrations. A hyperbola model fit was used to establish the standard curve and extrapolate 3R4F TPM deposition within the exposure module (GraphPad Prism 8.0.1).
(B) Known concentrations of glycerol (µg/mL) were quantified using Free Glycerol Reagent with a linear model used to fit the curve and extrapolate THP delivery within the exposure module.

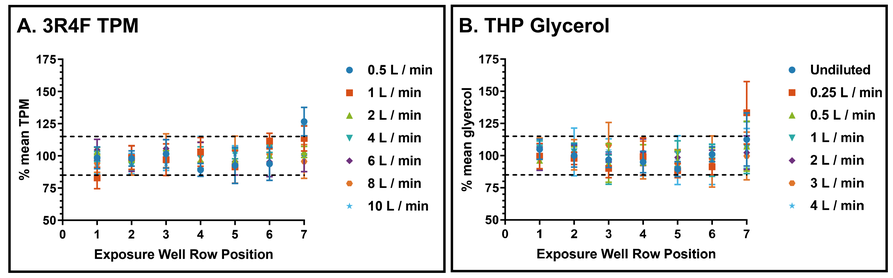

Figure 3: 3R4F and THP deposition in high exposure module. Deposition of 3R4F TPM (A) and THP glycerol (B) for all doses (L/min) within each well position per row (well 7 = dosimetry module) was determined by extrapolation of the Ex 355 / Em 485 fluorescence of smoke-exposed DMSO and glycerol deposition in PBS to their respective standard curves (Figures 2A & 2B). Values are presented as % of the overall mean for each dose. Dashed lines (--) are at ± 15%. Values are the mean ± SD from three independent experiments.

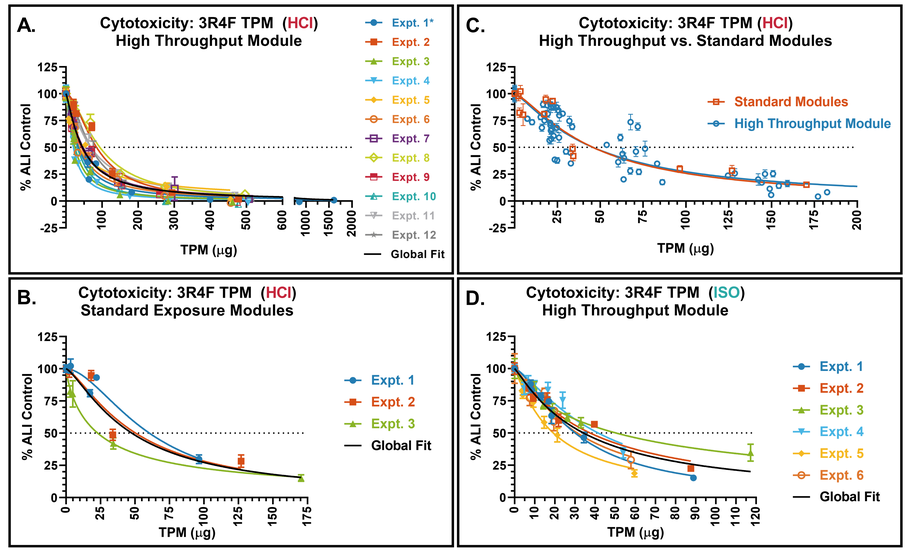

HCI High Throughput Exposure Module	r^2	IC_{50} (µg TPM)	SE
1*	0.9625	34.8	2.7
2	0.9861	85.0	2.2
3	0.9545	25.2	0.8
4	0.9741	20.8	0.6
5	0.9715	36.4	1.4
6	0.9589	37.3	1.0
7	0.9761	47.4	1.3
8	0.9664	94.2	2.7
9	0.9634	43.4	1.4
10	0.9830	32.0	0.6
11	0.9807	69.2	1.4
12	0.9853	68.8	1.2
Global Fit	0.8929	45.6	0.7

HCI Standard Exposure Modules	r^2	IC_{50} (µg TPM)	SE
1	0.9431	60.5	2.9
2	0.8797	50.5	4.1
3	0.9669	23.0	1.5
Global Fit	0.8544	47.7	2.6

ISO High Throughput Exposure Module	r^2	IC_{50} (µg TPM)	SE
1	0.9740	30.1	0.5
2	0.9332	37.5	1.2
3	0.9179	50.4	2.0
4	0.8309	41.6	1.9
5	0.9605	19.3	0.5
6	0.8592	31.1	1.3
Global Fit	0.8574	34.3	0.7

Figure 4: 3R4F whole smoke cytotoxicity (NRU).
CHO-WBL cells were exposed to whole smoke generated from 3 (HCI: A - C) or 8 (ISO: D) cigarettes. TPM deposition (µg) was extrapolated from the 3R4F TPM standard curve (Figure 2A). IC_{50} values (µg TPM ± SE) calculated using GraphPad Prism 8.0.1.
* = exposure with 8 cigarettes (Expt. 1 panel A)

Summary and Conclusions

- Within independent exposures, under HCI puffing parameters, freshly generated whole smoke from the 3R4F reference cigarette (TPM) and aerosol from a commercially available THP (glycerol) were delivered consistently within the High Throughput exposure module (positions 1 - 6) and corresponding dosimetry modules (position 7) (Figure 3).
- Overall coefficients of variation (CV) for 3R4F whole smoke deposition (TPM) within each dose (row) were ≤ 15%.
- The vast majority (> 80%) of CV's for THP aerosol deposition (glycerol) within each dose (row) were ≤ 15%, with some exceptions ranging from 15 – 21%.
- Cytotoxicity of 3R4F whole smoke, generated under either HCI or ISO smoking parameters, was consistent when using the High Throughput exposure module; Global Fit IC_{50} values (µg TPM ± SE) for HCI (45.6 ± 0.7, n = 12) and ISO (34.3 ± 0.7, n = 6).
- Global Fit IC_{50} values (µg TPM ± SE) for 3R4F whole smoke (HCI) from either the High Throughput (45.6 ± 0.7) or standard exposure modules (47.7 ± 2.6) were not significantly different (p = 0.4388; extra sums-of-squares F test, GraphPad Prism 8.0.1).
- Overall, the data presented demonstrate the consistent delivery of whole smoke/aerosol under controlled conditions and a reproducible *in vitro* biological response (cytotoxicity) with the Vitrocell® High Throughput exposure module that was comparable to the Standard Vitrocell® exposure modules.
- The Vitrocell® 48-well exposure module is a useful tool to increase sample throughput for the *in vitro* toxicological assessment of freshly generated whole smoke and aerosols from different tobacco product types. The 48-well module allows 7 smoke/aerosol doses (with 6 cultures per dose) per exposure versus only 2 doses (with 3 cultures per dose) for the standard exposure modules.

References

1. ISO 3402 (1999). Tobacco and tobacco products - Atmosphere for conditioning and testing (4th edition).
2. Aufderheide, M. and Gressmann, H. (2007) A modified Ames assay reveals the mutagenicity of native cigarette mainstream smoke and its gas vapour phase. Exp Toxicol Pathol, 58, 383 – 392.